ISHIDA

Price Computing Scale Printer

UNI-10



Weighing | Packing | Inspection | Display | Sell

Bigger, Sturdier, and Easier to Use

Promoting stress-free Counter Top Sales

UNI-10



Durability

Designed for every high volume stores with sturdy and durable body providing users the condition to 100% focus on taking care of customers.

Usability

The most reliable partner for improving uptime with a larger label roll holder and a new designed label cassette. Users will enjoy the ease of operation and range of visibility with the high quality resistive type touch panel.

Connectivity

Flexible for hand-shaking with external state of the art technology by adopting the Linux OS/latest circuit board allowing continued enhancement for store operations.

Robust designed body

- Adopting 5-wire resistive touch panel, it is durable to the dust and water drops.
- Minimizing the risk from debris and water getting inside of the printer.
- Perfect hand-fitting design contributing for quick and easy label roll change.





Control Panel

Supports flat design for ease of use and keeping it hygienic. Flexible layout and rich information displays allow even inexperienced staff to service customers with confidence.

25% expansion on label roll capacity

Supports 125mm labels roll diameter as one of the top class in the retail industry. Reduces stress by reducing the frequency of label roll changes.

*Based on internal survey in 2021.

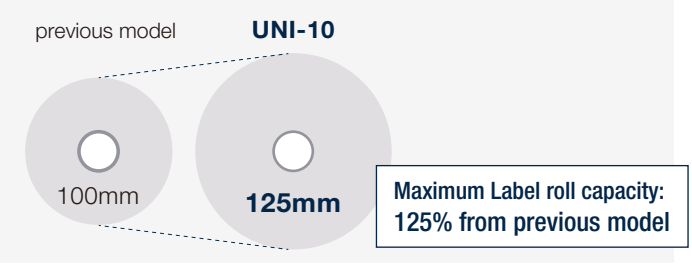

Large Weighing Platter

Adopted 160% larger weighing platter compared to the conventional model. No more concerns about products falling off or hanging over when weighing products.
With a printer or a controller located lower than the platter, nothing can get in a way, which allows users to concentrate on their primary task.
Thanks to the printing direction, users can easily check the content of the label while it is being printed.



Label Printing Accuracy

Industry-leading printing accuracy of 12 dots/mm. True-Type fonts from a PC-based system is also supported.
The system flexibly adapts to label design and provides easy-to-read, legible text.

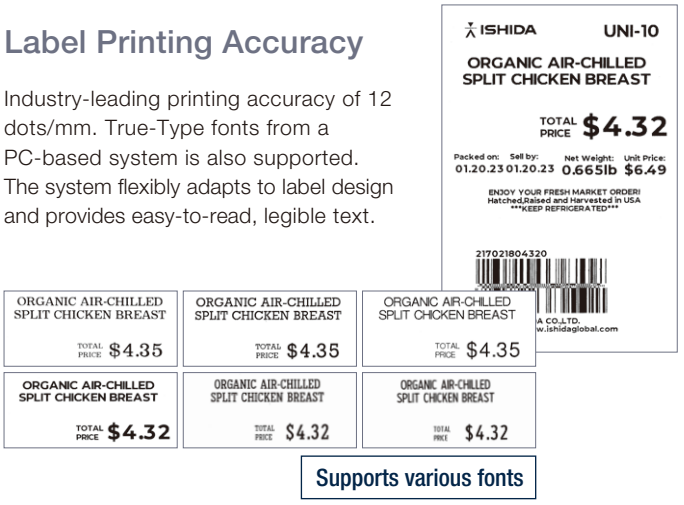

Line up

All machines are available in 10.1" or 12.1" sizes. Customers can select the model that best suits their needs.

Bench type (B)



* Customer display 10.1"

Pole type (P)



* Customer display 12.1"

Hanging type (H)



* Customer display 12.1"

Dimensions (Unit: mm)

Bench type (B)

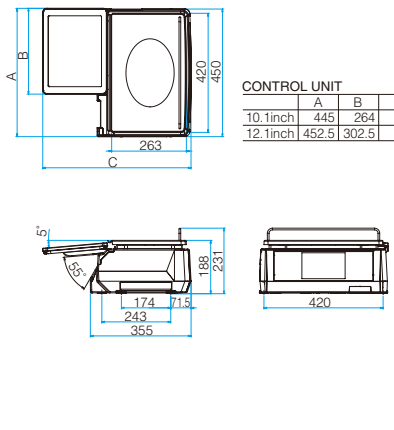

CONTROL UNIT

	A	B	C
10.1inch	445	264	474
12.1inch	452.5	302.5	523

Pole type (P)

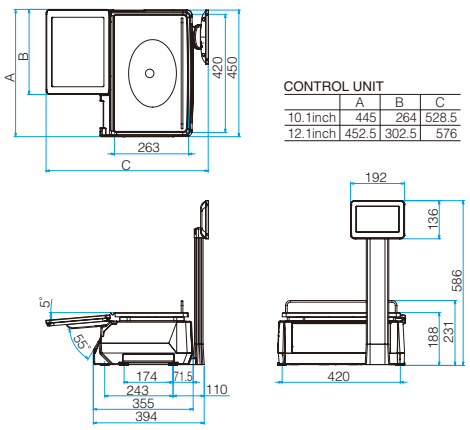

CONTROL UNIT

	A	B	C
10.1inch	445	264	528.5
12.1inch	452.5	302.5	576

Hanging type (H)

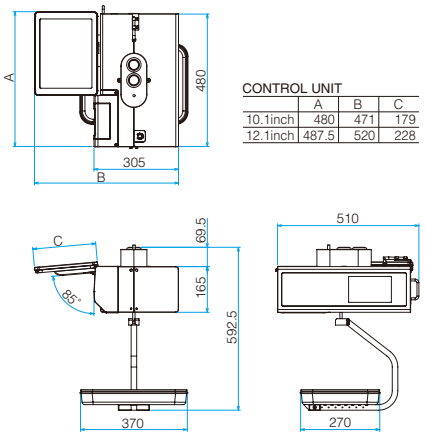

CONTROL UNIT

	A	B	C
10.1inch	480	471	179
12.1inch	487.5	520	228

Standard specification

Model			UNI-10
Variation*1			Bench, Pole, Hanging
Scale Unit	Capacity x Division		0-15lb x 0.005lb / 15-30lb x 0.01lb (Multi-interval) 0-6kg x 0.002kg / 6-15kg x 0.005kg (Multi-interval)
			0-30lb x 0.01lb (Single range) 0-15kg x 0.005kg (Single range)
	Scale platter size		Bench / Pole : 420 x 263mm Hanging : 370 x 270mm
Display	Size of operator side		Backlite 12.1" XGA (1024 x 768) TFT Color LCD Backlite 10.1" WXGA (1280 x 800) TFT Color LCD
	Size of customer side		Backlite 7" WVGA (800 x 480) TFT Color LCD
	System		Resistive thin film type analogue touch panel
Printer	Media type		Die-cut label / Continuous label / Receipt
	Media size	Outside diameter of roll	Max. 125mm (4.92") or less
		Inner core diameter	40mm +/- 1mm (1.5")
		Width	30-80mm (+2mm with backing paper)
		Length	20-300mm
	Cassette		Front-load type label cassette
	Thermal head		3"
	Resolution		12dot/mm (300dpi)
	Speed of printing (MAX)		120mm/sec
	Printing width (MAX)		78mm
	Printing length (MAX)		300mm
	Barcode type		JAN, EAN, EAN128, CODE128, UPC, ITF, GS1, QR
Control	I/O port		TCP/IP, USB, Drawer port
	OS		Linux
	Communication		Build-in RF bridge (WEP / WPA / WPA2) 2.4Ghz/5Ghz

*1) Self Service mode is available for any variation.

The information in this catalog is current as of February 3, 2023.
The company name and product name described in this catalog are registered trademarks.
The machine color in this catalog might be differ from the real machine.
The described machine appearance and specifications in this catalog are subject to change without any notification.

ISHIDA

ISHIDA CO., LTD. www.ishida.com

44 Shogoin Sannocho, Sakyo-ku,
Kyoto, 606-8392, Japan
Tel: +81 (0)75 751 4141

Printed in Japan 0223(SK) No.6312